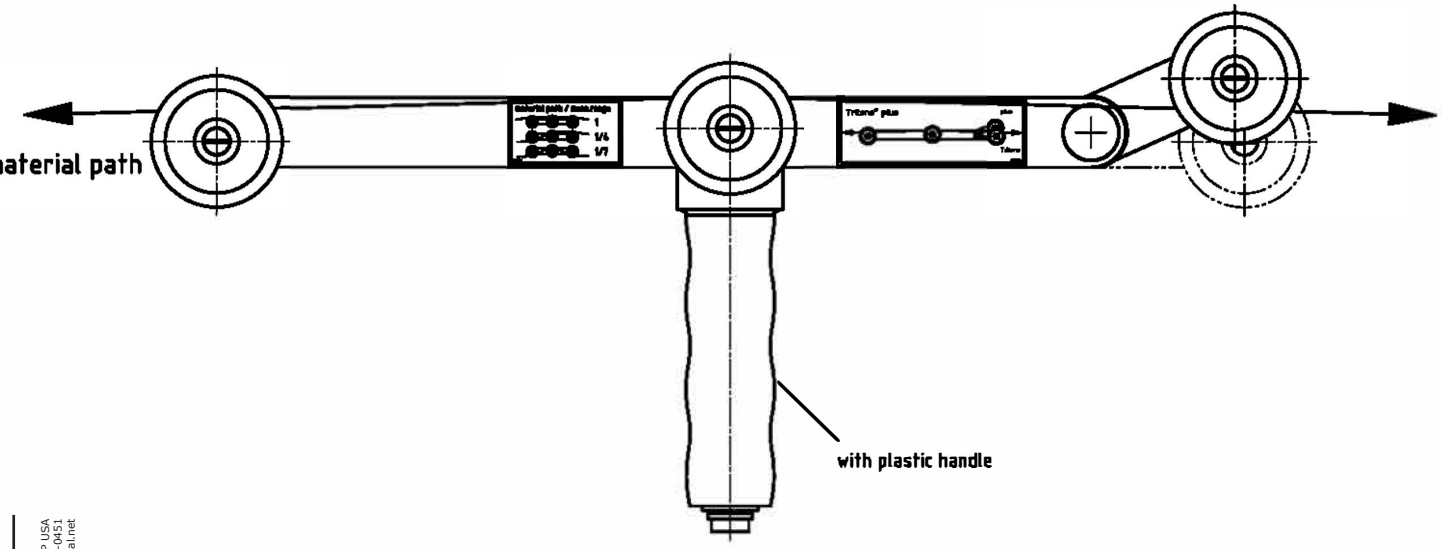

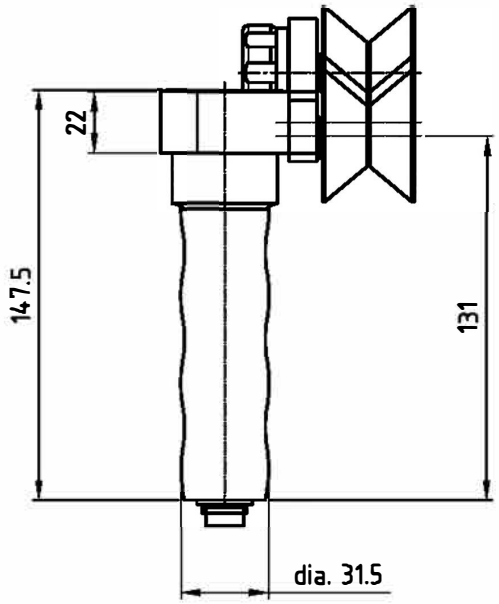

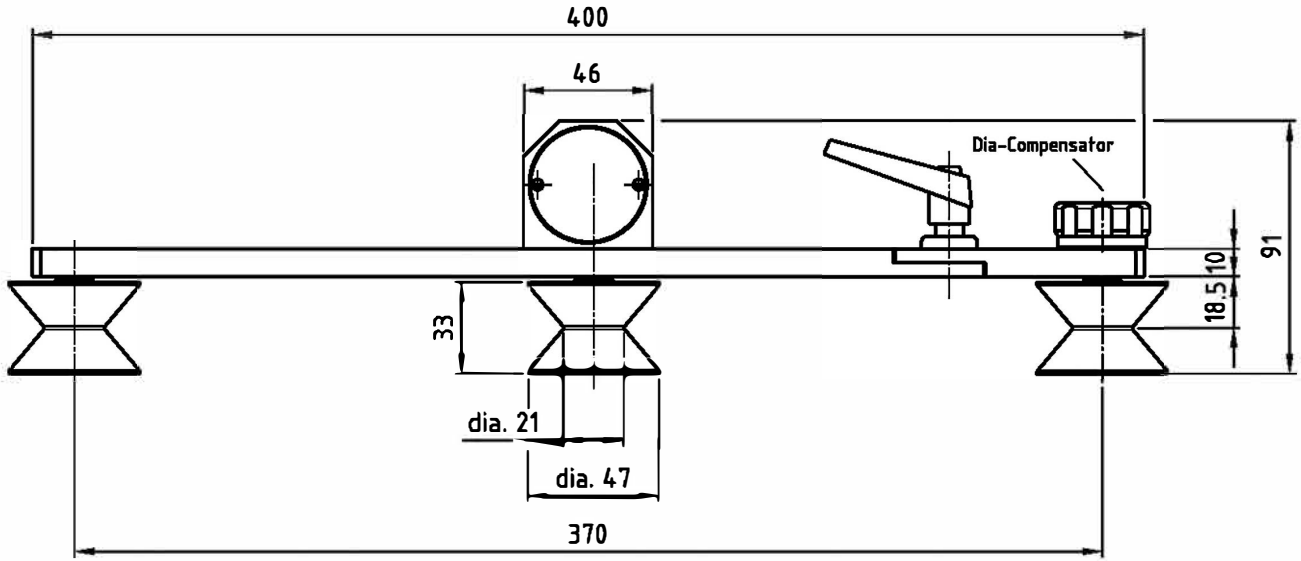

material path

dimensions (mm)

Distributed by: ABQ Industrial LP USA
Tel: +1 (281) 516-9292 / (888) 275-5772 eFax: +1 (866) 234-0451
Web: https://www.abqindustrial.net E-mail: info@abqindustrial.net

ABQINDUSTRIAL
PRECISION. RELIABILITY. QUALITY.

Adjustment Dia-Compensator

"Tritens"- function "Plus"- function

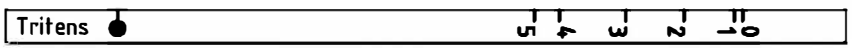

Scale for material diameter [mm] on "Plus"- function

- "Plus"- function (measurement in closed force systems)
- "Tritens"- function (standard function)

Schutzvermerk nach DIN 34 beachten				Allgemein-toleranz DIN 7168-f		Pr.Nr.	Maßstab 1:2 / A3	Mod.: 136.3
							Werkstoff	
					Datum	Name	Tritens Plus with 400mm supporting board "Plus" – function	
				Erst.	28.09.06	ch		
				Gepr.				
				Norm				
				I.St.	28.09.06	ds		
				Honigmann GmbH Industrielle Elektronik 42289 Wuppertal			Z.-Nr.: K 663938	Blatt 1 v. 1Bl.
Zust.	Änderung	Datum	Name	Urspr. 641835			Ers. für Z.Nr.: 640636/640640	ers. durch Z.Nr.: