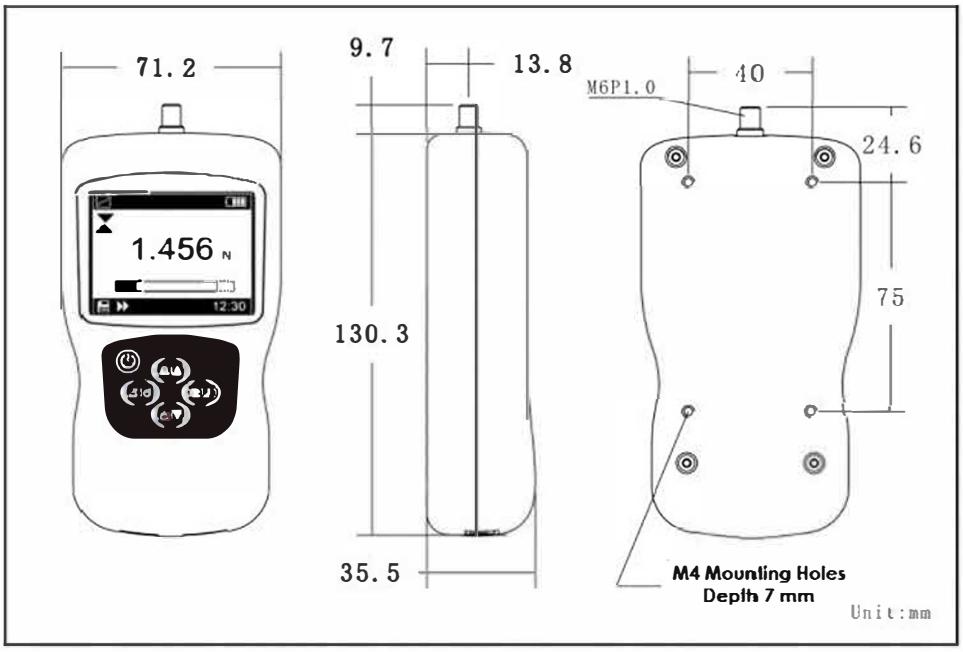

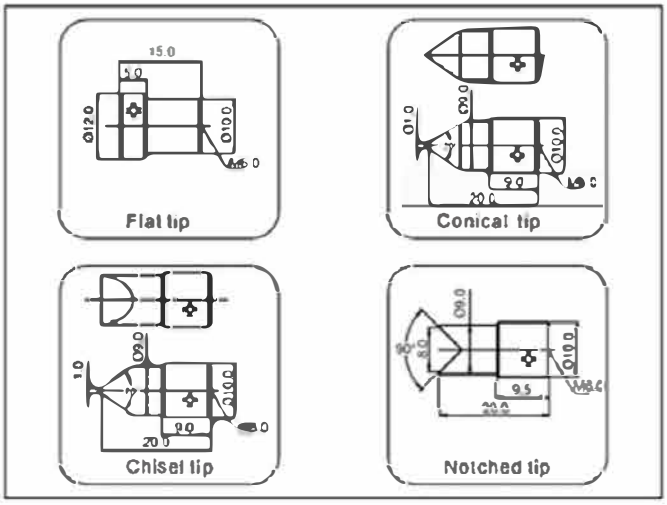

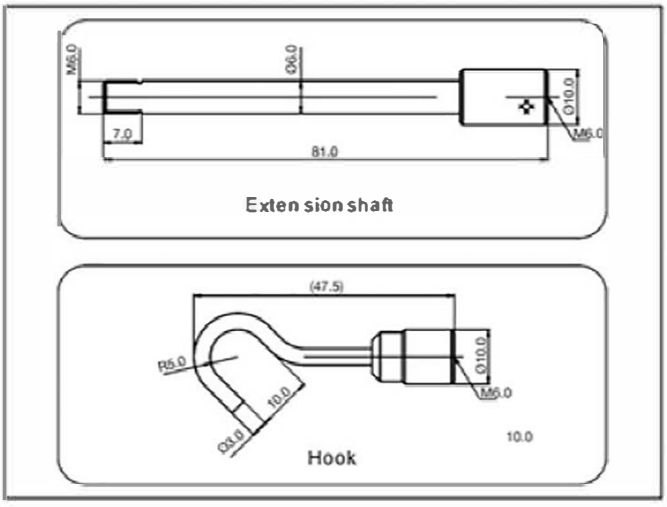

ABQINDUSTRIAL
PRECISION. RELIABILITY. QUALITY.

Distributed by: ABQ Industrial LP USA
Tel: +1 (281) 516-9292 / (888) 275-5772 **eFax:** +1 (866) 234-0451
Web: https://www.abqindustrial.net **E-mail:** info@abqindustrial.net