**Distributed by:** ABQ Industrial LP USA
**Tel:** +1 (281) 516-9292 / (888) 275-5772 **eFax:** +1 (866) 234-0451
**Web:** https://www.abqindustrial.net **E-mail:** info@abqindustrial.net

# Plug and Test™ Torque Sensors **Series R54**

Series R54 smart sensors measure bi-directional torque for a wide variety of applications across virtually all industries. Convert any wrench to a torque tool with this sensor, or use it as a component of a torque testing system. Capacities available from 20 to 5,000 lbFin [2 to 550 Nm]. Compatible with Mark-10 model 5i and 3i indicators (sold separately) through unique Plug & Test™ technology.

## Specifications

| | |
|---|---|
| Accuracy: | ±0.6% [illegible] |
| Safe Overload: | 150% [illegible] |
| Weight: | 0.6 [illegible] lb |

## Dimensions in [mm]

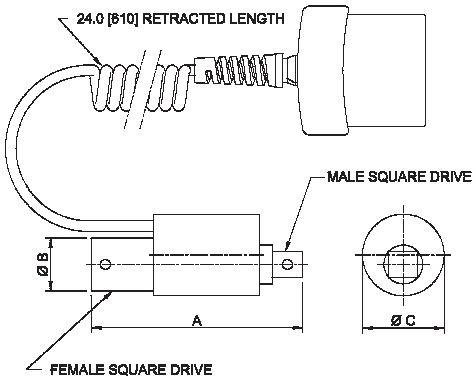


| Model No. | A | ØB | ØC | Drive Size |
|---|---|---|---|---|
| MR54-20 | 1.88 [47.8] | 0.56 [14.2] | 1.00 [25.4] | 1/4" |
| MR54-200 - MR54-400 | 3.00 [76.2] | 0.73 [18.5] | 1.12 [28.6] | 3/8" |
| MR54-1000 | 3.50 [88.9] | 0.98 [24.9] | 20.0 [508.0] | 1/2" |
| MR54-5000 | 5.00 [127.0] | 1.48 [37.6] | 2.0 [50.8] | 3/4" |

< Unique Plug & Test™ technology allows for interchangeable sensors to be used with a Mark-10 model 5i or 3i indicator. All calibration and configuration data is saved in the smart connector.

< The Plug & Test™ connector locks into the receptacle in the indicator when fully inserted. Dual buttons on the indicator housing release the connector for easy removal. Gold plated spring contacts ensure long lasting and reliable connection.

^ Optional AC1010 mounting kit is used to hold an MR54-200 or MR54-400 sensor in place.

^ Optional AC1016 mounting kit mounts an MR54-200 or MR54-400 sensor to a torque test stand.

< A Series R54 sensor is shown set up for a typical torque wrench testing application.

## Optional Items

| | |
|---|---|
| AC1010 | Mounting [illegible] |
| AC1016 | Mounting [illegible] que test stand |

## Capacity x Resolution

| Model No. | Capacity x Resolution - with Model 5i indicator | | | | | Capacity x Resolution - with Model 3i indicator | | |
|---|---|---|---|---|---|---|---|---|
| | lbFin | lbFft | kgFmm | Ncm | Nm | lbFin | kgFmm | Ncm |
| MR54-20 | 20x0.02 | 1.5 x 0.002 | 230 x 0.2 | 220 x 0.2 | 2 x 0.002 | 20 x 0.02 | 230 x 0.2 | 220 x 0.2 |
| MR54-50 | 50x0.05 | 4 x 0.005 | 580 x 0.5 | 570 x 0.5 | 5.7 x 0.005 | 50 x 0.05 | 580 x 0.5 | 570 x 0.5 |
| MR54-100 | 100x0.1 | 8 x 0.01 | 1150 x 1 | 1150 x 1 | 11.5 x 0.01 | 100 x 0.1 | 1150 x 1 | 1150 x 1 |
| MR54-200 | 200x0.2 | 16 x 0.02 | 2300 x 2 | 2200 x 2 | 22 x 0.02 | 200 x 0.2 | 2300 x 2 | 2200 x 2 |
| MR54-400 | 400x0.5 | 32 x 0.05 | 4600 x 5 | 4500 x 5 | 45 x 0.05 | 400 x 0.5 | 4600 x 5 | 4500 x 5 |
| MR54-1000 | 1000x | 80 x 0.1 | 11500 x 10 | 11000 x 10 | 110 x 0.1 | 1000 x 1 | 11500 x 10 | 11000 x 10 |
| MR54-5000 | 5000x | 400 x 0.5 | 55 x 0.05 kgFm | 55000 x 50 | 550 x 0.5 | 5000 x 5 | 55 x 0.05 kgFm | 550 x 0.5 Nm |

**Distributed by:** ABQ Industrial LP USA
**Tel:** +1 (281) 516-9292 / (888) 275-5772 **eFax:** +1 (866) 234-0451
**Web:** https://www.abqindustrial.net **E-mail:** info@abqindustrial.net