Albuquerque Industrial
69-10 108th Street # 2-O
Forest Hills, NY 11375 U.S.A.

www.abqindustrial.net
e-mail: info@abqindustrial.net
Toll Free: +1 (888) 275-5772
Tel: +1 (718) 846-6458
Fax: +1 (718) 846-6459

Force gauge device

---

45 degrees peeling test fixture / P45-50N

Most suitable for sealing strength of a cup container cover.

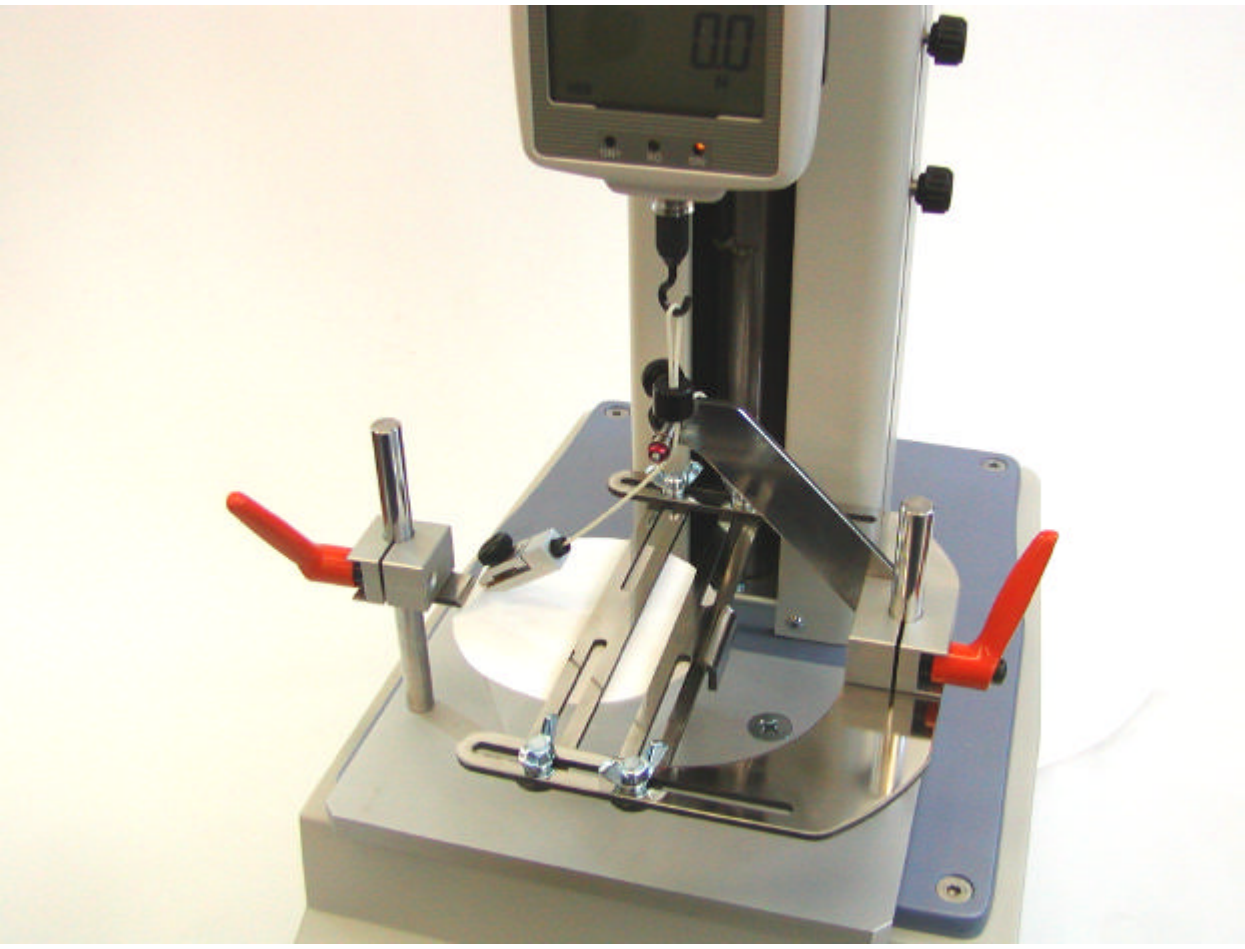

[Applications]
This can measure peak value of the beginning of opening cover.
Peeling strength of a film cover of plastic container. For food and medical care etc.

[Feature]
Peeling angle is 45 degree, and this angle is nearly practical condition of opening cover.
It supports various container sizes.
Urethane grip is suitable for this film such as 10-25 micron for the reason of preventing slipping.
Urethane grip reduces the risk of cutting a sample by grip itself.

[Specifications]

Model	P45-50N
Capacity	50N
Container maximum dimensions	Height 12-90mm Diameter 30-120mm Detachment distance is different by container size.
Weight	Grip 30g / Jig 1200g
Opening width	2mm
Recommended test stand and force gauge	MV/ DS2, ZP / Z2 Series

Sep.2005

[Dimension]

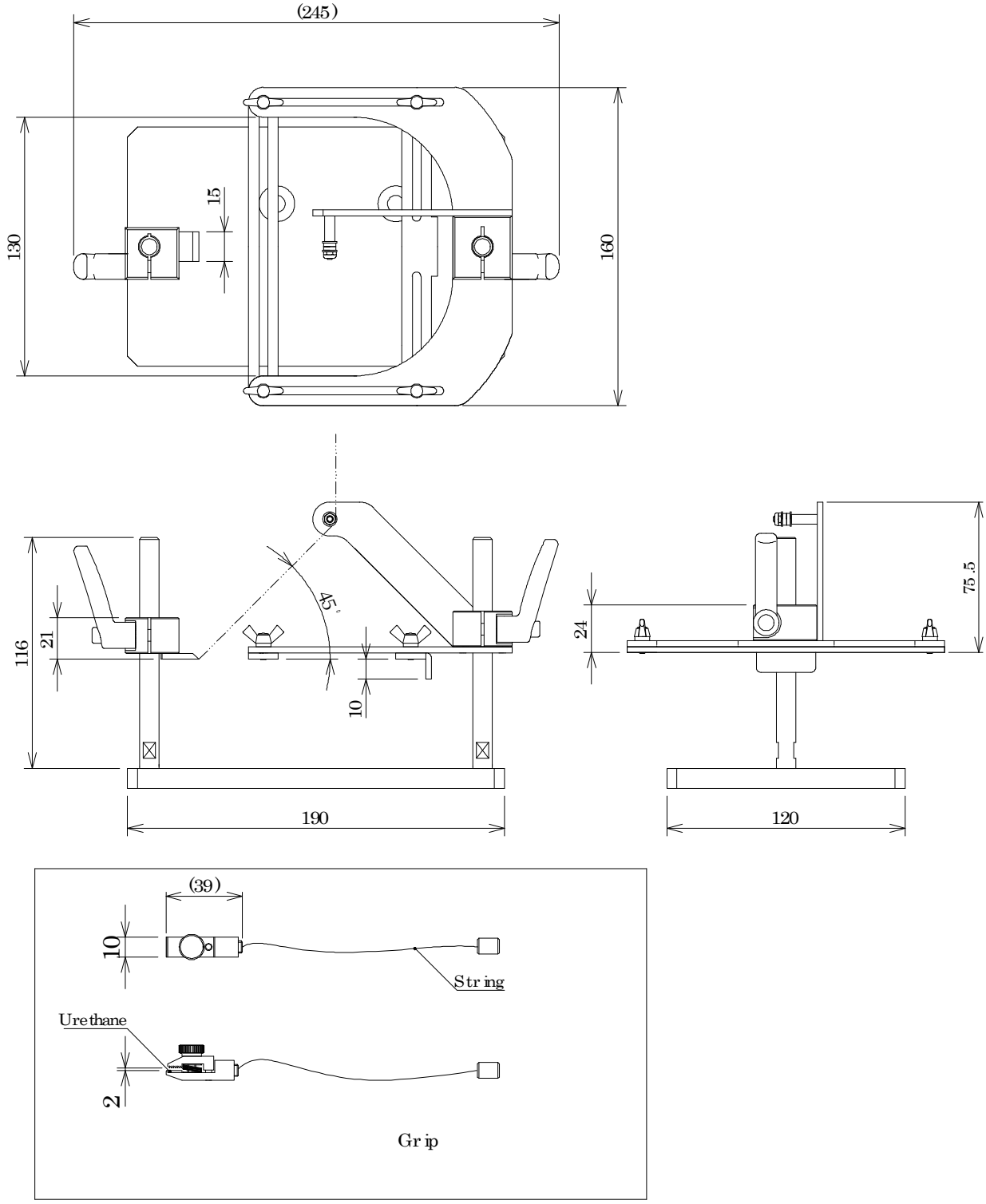

[NOTICE]
Design, appearance, and specifications may be changed for modification or improvement without any prior notice.
Specific material and appearance may not be used. Please contact us for detail.

Albuquerque Industrial
69-10 108th Street # 2-O
Forest Hills, NY 11375 U.S.A.

www.abqindustrial.net
e-mail: info@abqindustrial.net
Toll Free: +1 (888) 275-5772
Tel: +1 (718) 846-6458
Fax: +1 (718) 846-6459