Albuquerque Industrial
69-10 108th Street # 2-O
Forest Hills, NY 11375 U.S.A.
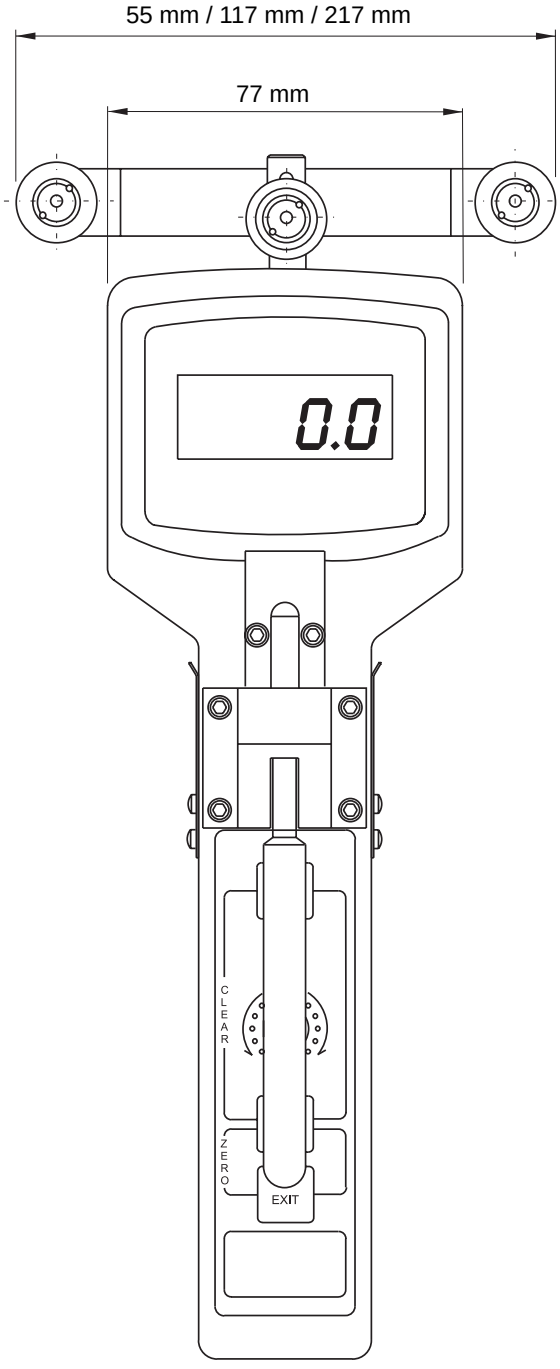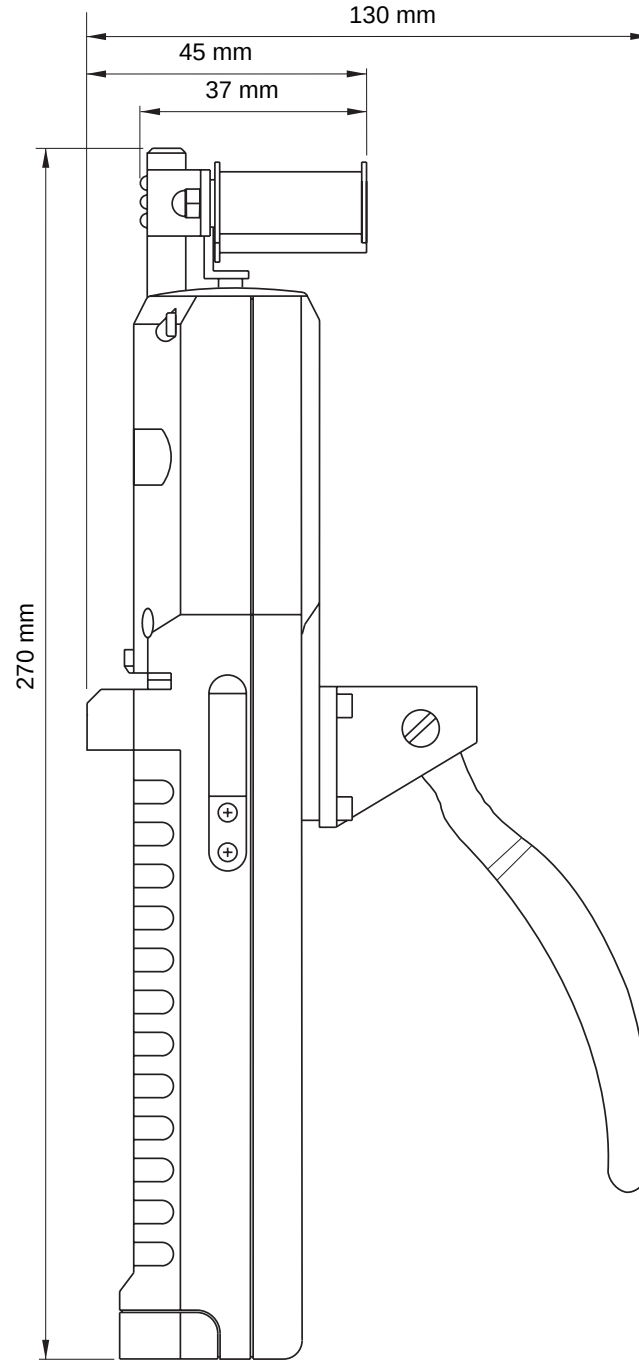
www.abqindustrial.net
e-mail: info@abqindustrial.net
Toll Free: +1 (888) 275-5772
Tel: +1 (718) 846-6458
Fax: +1 (718) 846-6459